Mercedes-Benz

G Class
Electrical Systems

These technical training materials are current as of the date noted on the materials, and may be revised or updated without notice. Always check for revised or updated information.

To help avoid personal injury to you or others, and to avoid damage to the vehicle on which you are working, you must always refer to the latest Mercedes-Benz Technical Publication and follow all pertinent instructions when testing, diagnosing or making repair.
Illustrations and descriptions in this training reference are based on preliminary information and may not correspond to the final US version vehicles. Refer to the official introduction manual and WIS when available.
Copyright Mercedes-Benz USA, LLC, 2003

MBMANUALS.COM

Reproduction by any means or by any information storage and retrieval system or translation in whole or part is not permitted without written authorization from Mercedes-Benz USA, LLC or its successors.
Published by Mercedes-Benz USA, LLC
Printed in U. S.A.

Power Distribution

F32 - Pre-fuse box
F34 - Fuse box
G1 - Battery
G2 - Alternator
M1 - Starter
N10/1 - Front SAM
N10/2 - Rear SAM
W10 - Battery ground
50 - Starter signal

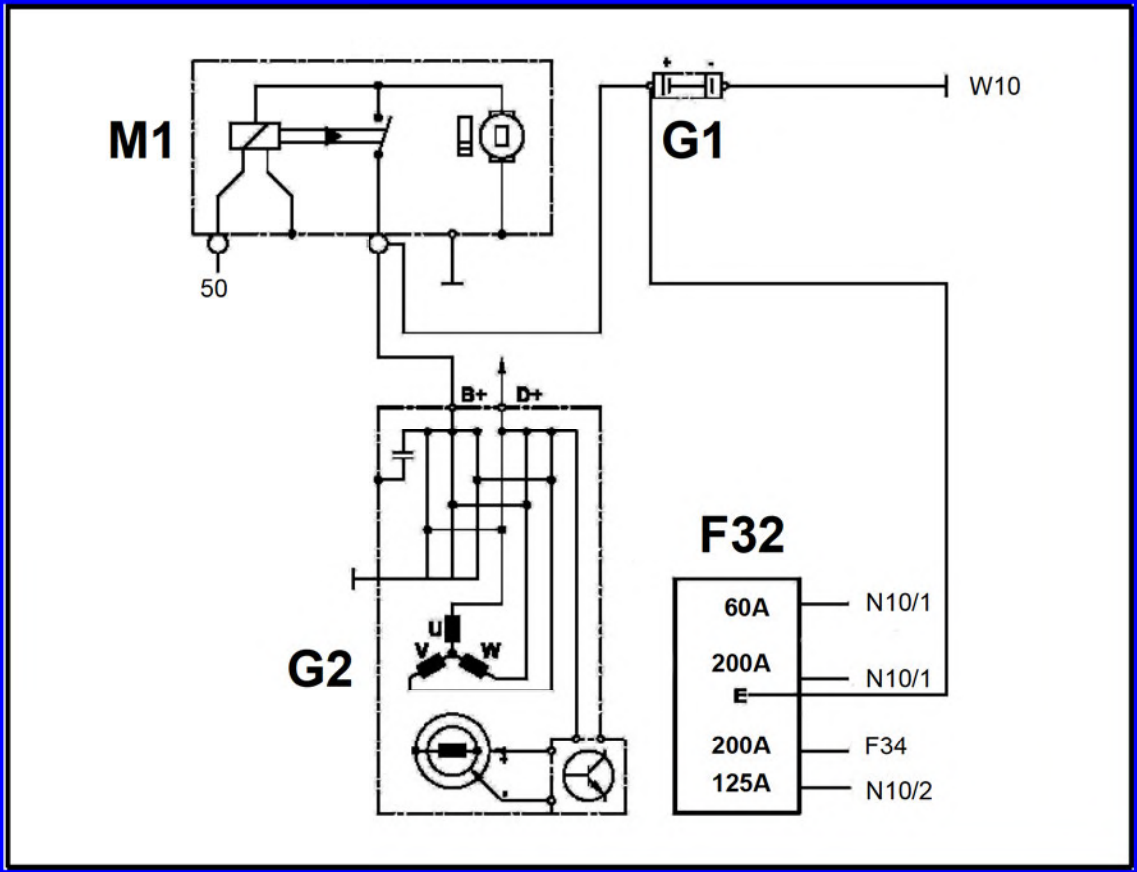

Battery

Battery (G1):
- AGM (absorbent glass mat)
  - 12 V 90 Ah

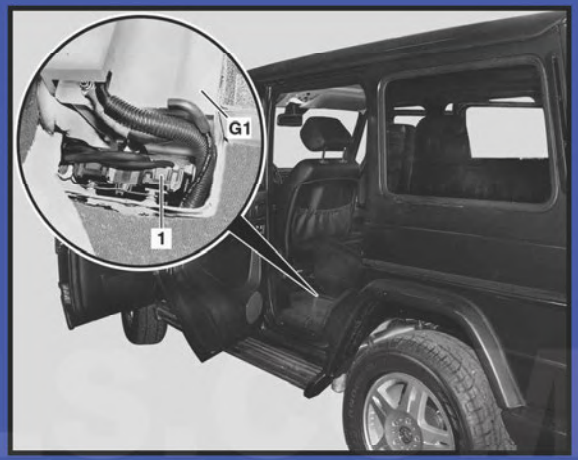

Pre-fuse Box (F32):
- Power distribution point
- Reduce fire risk in an accident
- Fuses not replaceable
  (replace complete assembly)

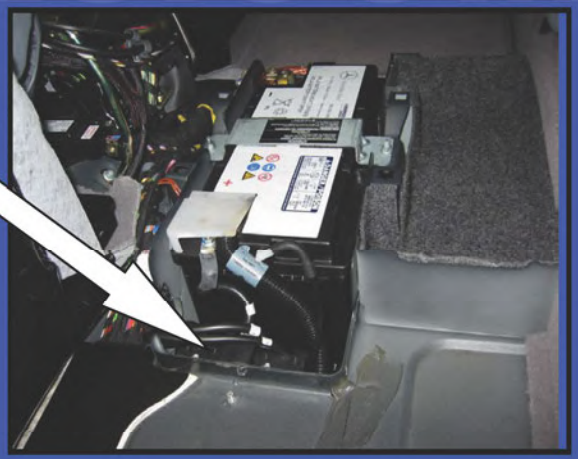

MBMANUAL

AGM / VRLA Battery Construction

The major differences in construction between a AGM battery and standard lead acid automotive battery are:

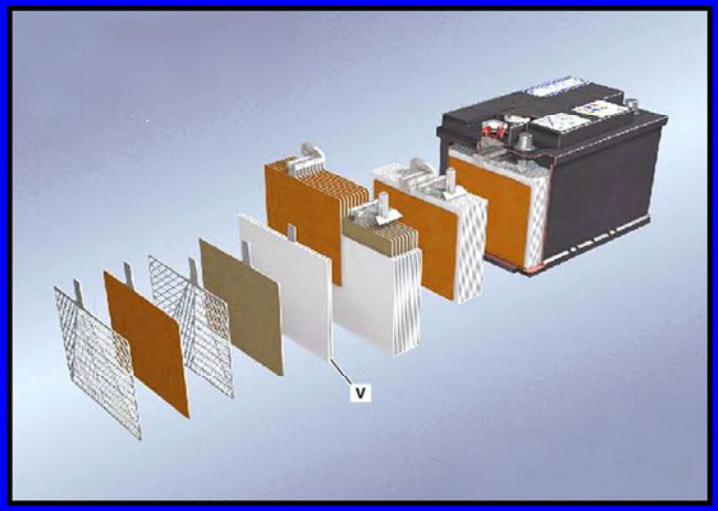

- Completely sealed case construction
- No liquid electrolyte
- Absorbent glass mat (V) holds electrolyte in contact with positive and negative plates
- Vent valve is normally sealed no gases can escape during normal charging
- Vent valve is only opened if internal pressure exceeds predetermined level

AGM / VRLA Battery Properties

- Longer service life
- Improved cold starting characteristics
- Improved deep cycle performance
- No liquid acid spills or leaks
- Fast recharge time
- Completely maintenance free

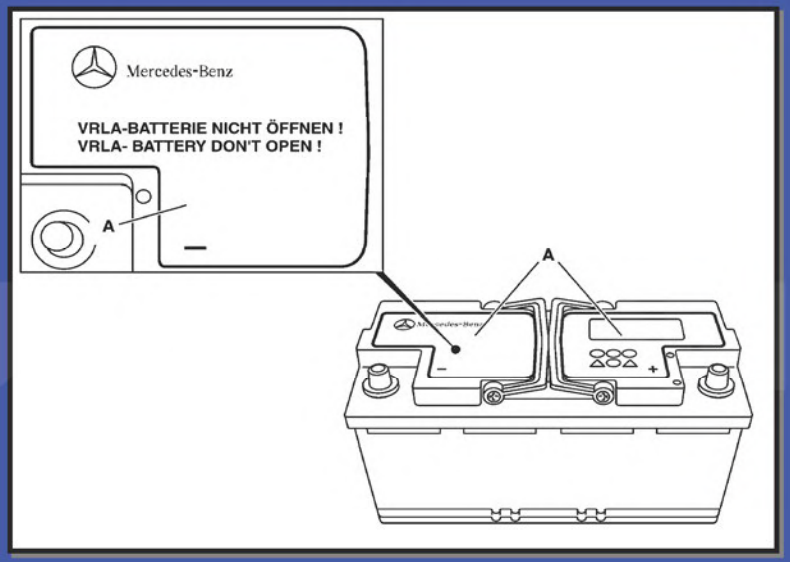

How to Identify AGM Battery:

- Battery label (VRLA)
  Valve Regulated Lead Acid
- No fill marks
- No fill caps

AGM / VRLA Battery Testing

- AGM batteries cannot be tested using previous methods (load and acid density tests)
- Requires the new Midtronics MCR 717 tester and printer
- Tester measures battery conductance by inducing A/C voltage of a given frequency and amplitude on the battery posts and monitoring the current flow in response to it
- Discard the acid density sheet, and enter test code (recorded by tester) on warranty claim forms
- Battery replaced under warranty must have a test printout attached to the R.O.
- Detailed information about testing, and using the MCR717 can be found in WIS SI54.10-P-0003-01

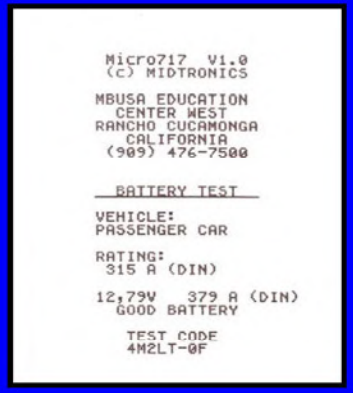

Micro717 V1.0
(c) MIDTRONICS

MBUSA EDUCATION
CENTER WEST
RANCHO CUCAMONGA
CALIFORNIA
(909) 476-7500

BATTERY TEST

VEHICLE:
PASSENGER CAR

RATING:
315 A (DIN)

12.79V 379 A (DIN)
GOOD BATTERY

TEST CODE
4M2LT-0F

Fuse & Relay Location

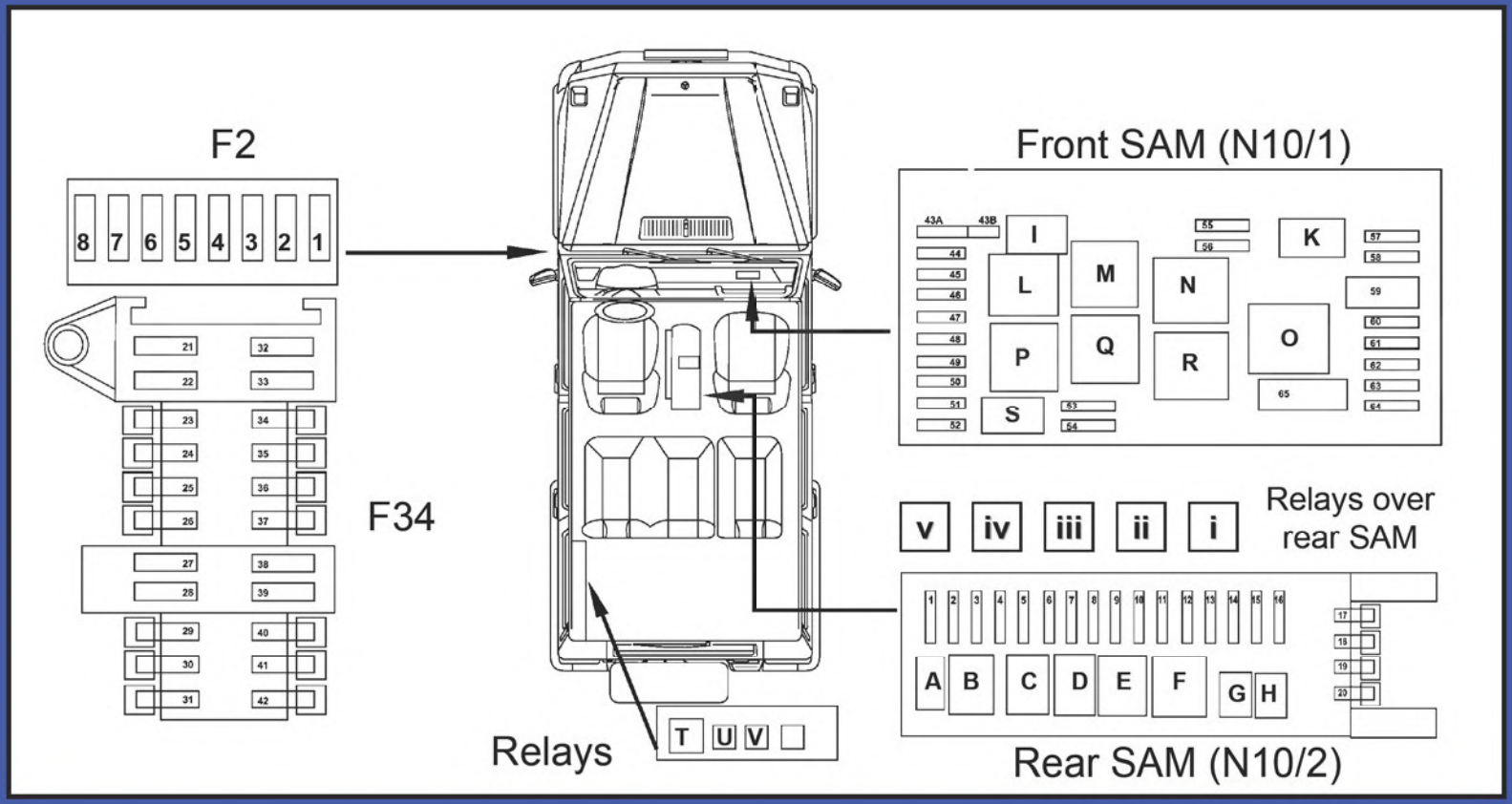

Fuse and Relay Legend

F34 Fuse data

21	- DCM FL	30A
22	- DCM FR	30A
23	- Rear reading light	5A
24		
25	- UCP / Front seat heaters	10A
26	- Illuminated door sill	7.5A
27	- LF ESA	30A
28	- Interior socket	30A
29		
30	- HVAC blower	40A
31	- EIS	20A
32	- LR DCM	30A
33	- RR DCM	30A
34	- TELE AID	7.5A
35		
36		
37	- Diff. lock relay	15A
38	- RF ESA	30A
39	- Transfer case module	40A
40		
41	- UCP / AC	7.5A
42	- Inst. cluster	7.5A

F2 Fuse data

1		
2	- ESP / Stop lamp switch N.C.	10A
3		
4	- Steering angle sensor / Stop lamp switch N.O.	15A
5		
6	- Rear seat heating module	20A
7	- L Auxiliary fan / Steering angle sensor	20A
8	- R Auxiliary fan	20A

Relays (at left rear of vehicle)

T	- Transmission output speed sensor ballast (N36)
U	- Tailgate central locking (K44)
V	- Rear window wiper (K68)

Relays (over rear SAM)

i	- L Auxiliary fan (K9/1)
ii	- R Auxiliary fan (K9/2)
iii	- High pressure pump relay ESP (K60)
iv	- Stop lamp suppression (K55)
V	- Diff. lock & vac. pump (K36)

Front SAM (N10/1) Legend

43A	- Fanfare horns term. 15R	15A
43B	- Fanfare horns term. 30	15A
44	- Cell phone cradle term. 15R	5A
45	- Airbag term. 15R	10A
46	- Wiper on / off	20A
47	- Cigar lighter / glove term. 15R	15A
48	- Ignition Coils term. 15	15A
49	- Airbag term. 15	10A
50	- Rear HS / lights term. 15R	5A
51	- Instrument cluster	7.5A
52	- Starter	15A
53a	- Engine / M1 term. 87	15A
53b		
54a	- Engine / M2 term. 87	15A
54b		
55	- TC / ETC	7.5A
56	- Diff, locks / PTS	7.5A
57	- EIS term. 30Z	5A
58	- F2	40A
59	- ABS return pump	50A
60	- ABS valve block	40A
61		
62	- Light switch term 15R	5A
63	- Diff. lock / lights	5A
64	- Radio / COMAND	10A
65	- Air injection pump	40A

MBMANUALS.COM

Relays

I	- Fanfare horns
K	- Chassis term. 87 (ETC,ESM,TC, diff. switch)
L	- Wiper speeds 1 & 2
M	- Terminal 15 (IC, AB, TELE AID, light switch)
N	- F2 supply
O	- Air pump
P	- Terminal 15R (AB, RSH, glove box light, cigar)
Q	- Wiper on / off (cutoff to L)
R	- Engine term. 87 (engine, R SAM, wiper)
S	- Starter

Rear SAM (N10/2) Legend

1	- Terminal 15R2 / Tes left	30A
2	- Terminal 15R2 / Tes right	30A
3		
4	- Fuel pump	15A
5		
6		
7		
8	- Antenna module, ATA siren tilt sensor	7.5A
9	- OCP	25A
10	- Rear window defroster	20A
11		
12		
13	- Pressure pump term. 15	20A
14	- Rear wiper	15A
15	- Filler cap	10A
16	- VCS	5A
17	- Trailer ECM	20A
18	- Trailer socket	20A
19	- Pressure pump term. 30	20A
20	- Central locking tailgate	10A

Relays

A	- Fuel pump
B	- Relay 2 terminal 15R
C	
D	
E	- Rear window defroster
F	- Relay 1 terminal 15R (TELE AID, ETC speed sensor ballast, rear wiper
G	- Filler cap polarity reverser 1
H	- Filler cap polarity reverser 2

F2 & F34 Fuse Box

Location : left instrument panel (cover removed)

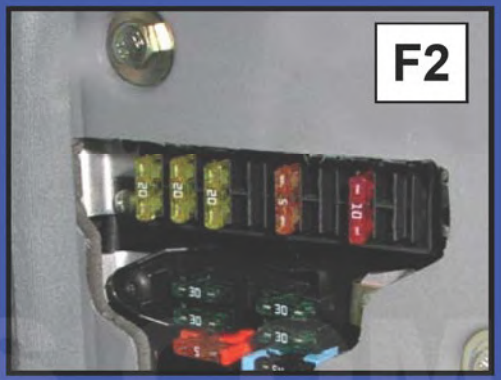

Note: fuse chart can be found in F34

Front SAM (N10/1)

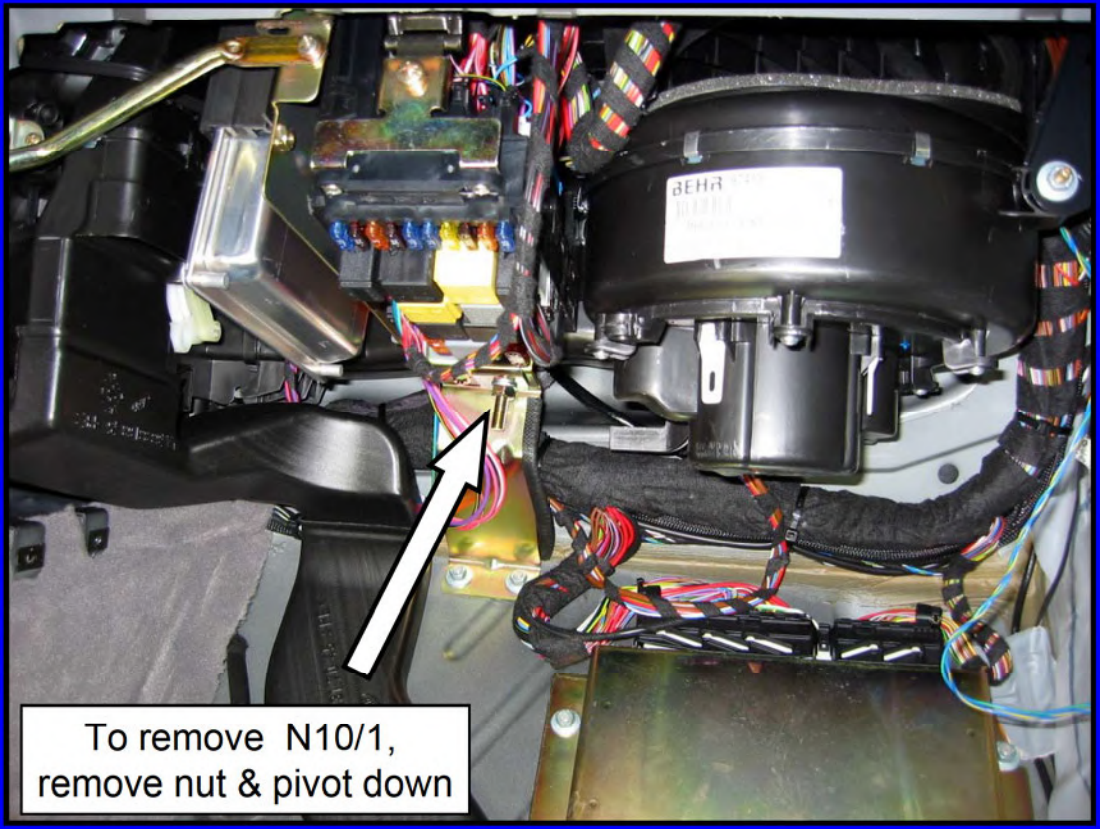

Location: under dash on passenger side

Rear SAM (N10/2)

- Rear SAM fuses are accessible from right side
- Right front seat fuse located in F34 (left of instrument panel)

MBMANUALS.COM

- Rear SAM located under center console
- Additional relays (i - v) above rear SAM are not accessible through cover

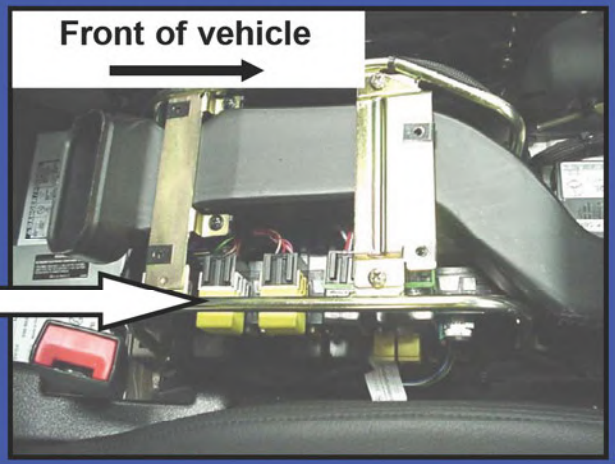

Additional Relays

T - Transmission output speed sensor ballast (N36)

U - Tailgate central locking (K44)

V - Rear window wiper (K68)

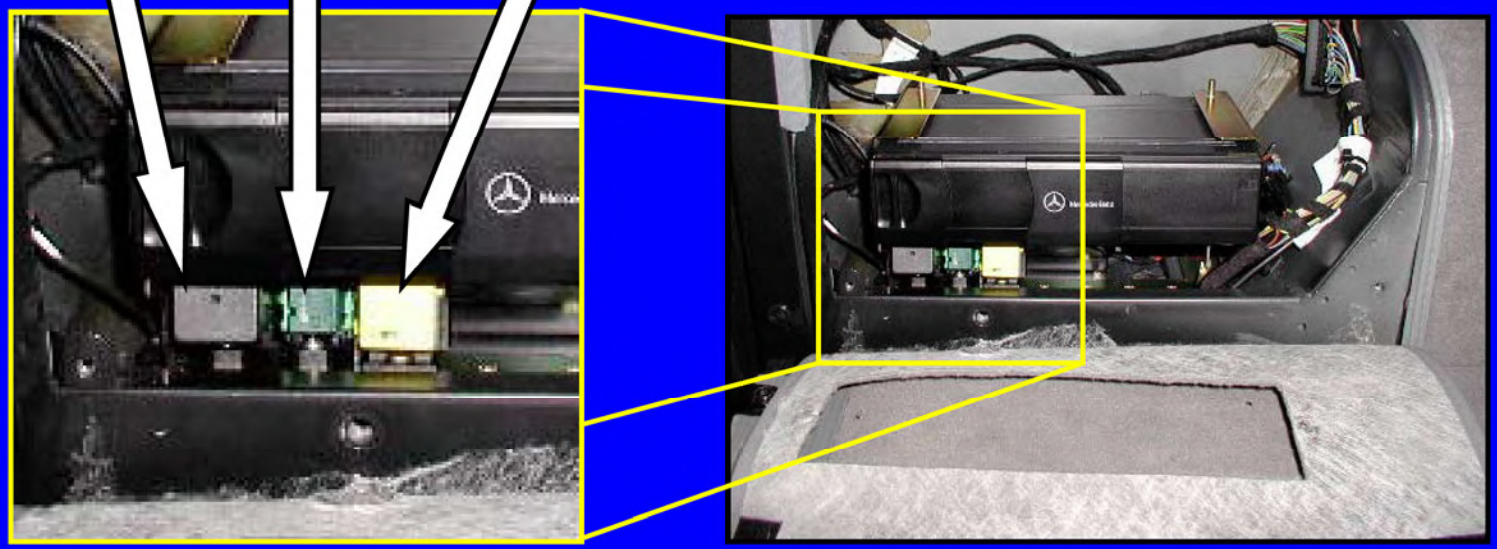

Location: left rear trunk

Networking Legend

A1	- Instrument cluster
A2/6	- Compact disc changer
A2/13	- Sound amp (Harman/Kardon option)
A35	- HSE / PSE
A35/8	- TELE AID module
A35/11	- Voice control module
A40/3	- COMAND
N2/7	- SRS module
N3/10	- ME-SFI module
N10/1	- Front SAM
N10/2	- Rear SAM
N15/3	- Electronic transmission control
N15/5	- Electronic shifter module
N15/7	- Transfer case module (VG)
N22	- Air conditioning module
N25/6	- Rear seat heater module
N32/1	- Left ESA
N32/2	- Right ESA
N47/5	- ESP module (from DAS)
N69/1	- LF door control module
N69/2	- RF door control module
N69/3	- LR door control module
N69/4	- RR door control module
N70	- Overhead control panel
N72/1	- Upper control panel
N73	- Electronic ignition switch
N80	- Steering column module
S76	- Differential lock switch group
X30/4	- CAN B connector
X30/6	- CAN B connector
X30/7	- CAN B connector

Note: ESP module listed as N30/4 in USA ETM and on STAR Tek ETM

MBMANUALS.COM

Networking

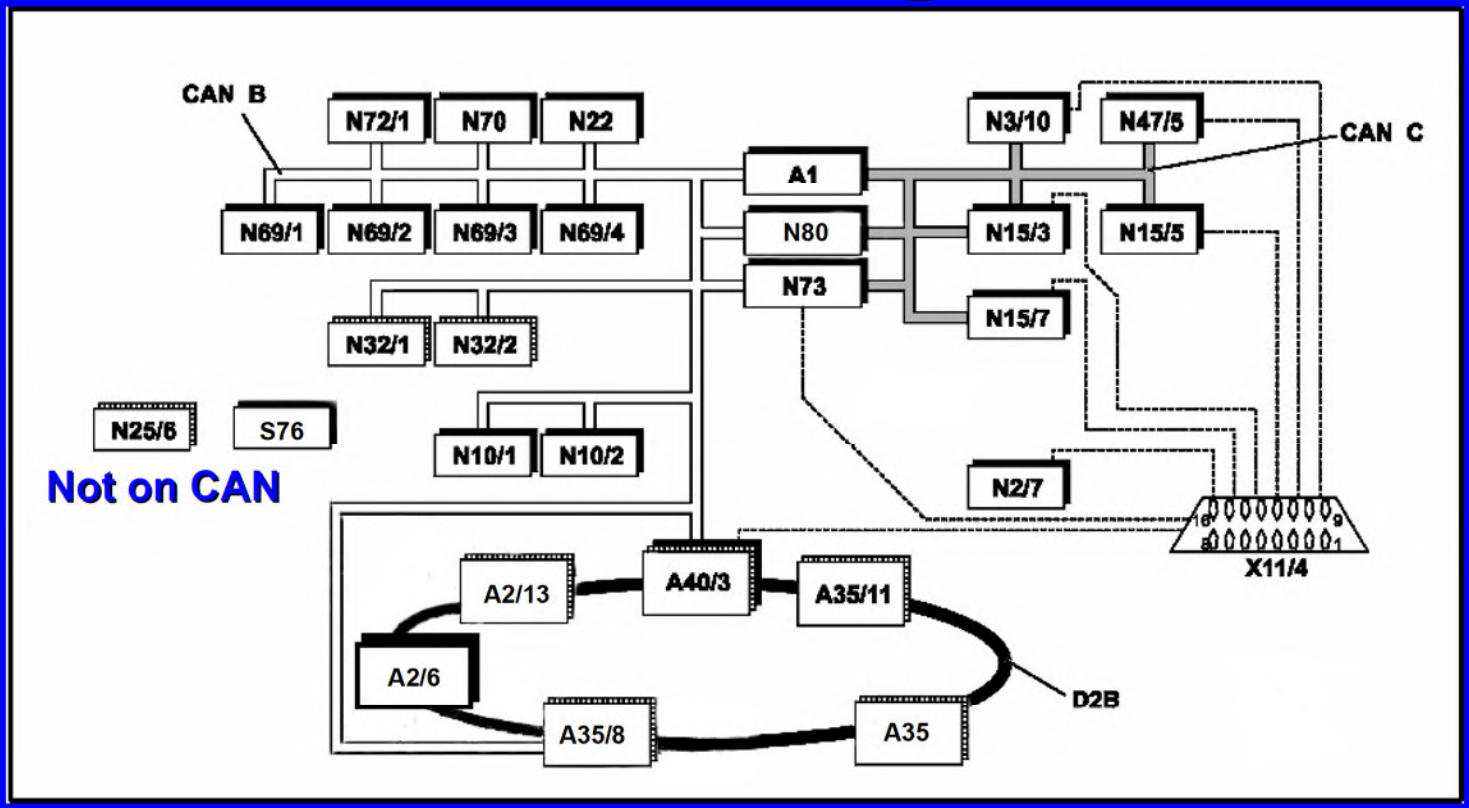

Networking based on W203

Note: D2B components configuration - refer to T-I-82.70/185A

CAN B Diagram

All CAN H wires are red except for "jumpers"
All CAN L wires are brown

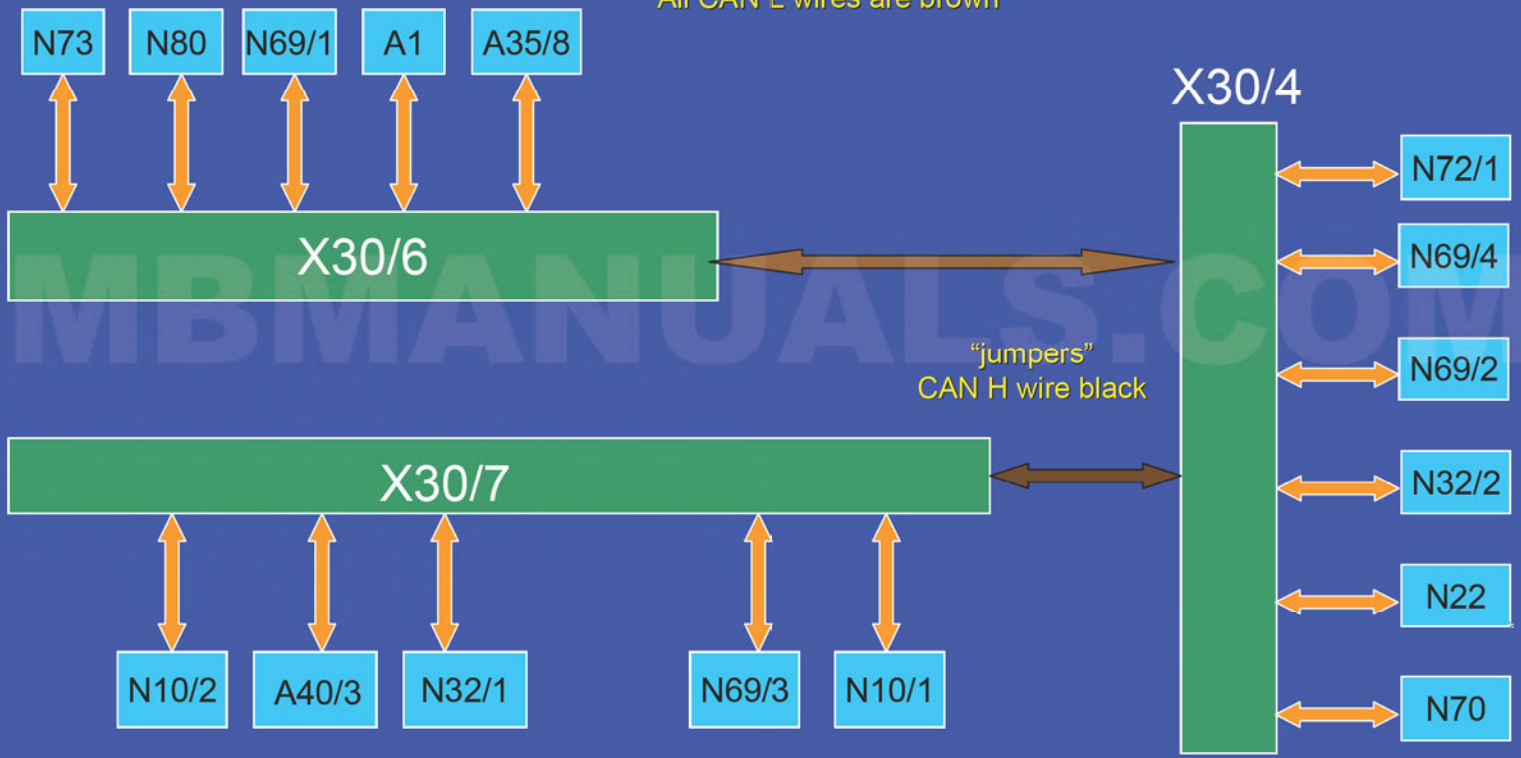

MBMANUALS.COM

CAN H voltage = ~ 0 volts (sleep) ~0.65 volts (active)
CAN L voltage = ~11 volts (sleep) ~4.65 volts (active)

CAN B Connector X30/6

Most CAN wires are labeled near the plug connector with German acronyms

EZS	- Electronic ignition switch (N73)
Kombi	- Instrument cluster (A1)
E-Call	- TELE AID
	- Jumper to X30/4
TSG	- LF Door control module (N69/1)
	- Steering column module (N80)

Location: under drivers dash
(shown with underdash trim removed)

CAN B Connector X30/4 & X30/7

Location: in passenger kick panel behind water protection sheet

X30/4 & X30/7 Label Legend

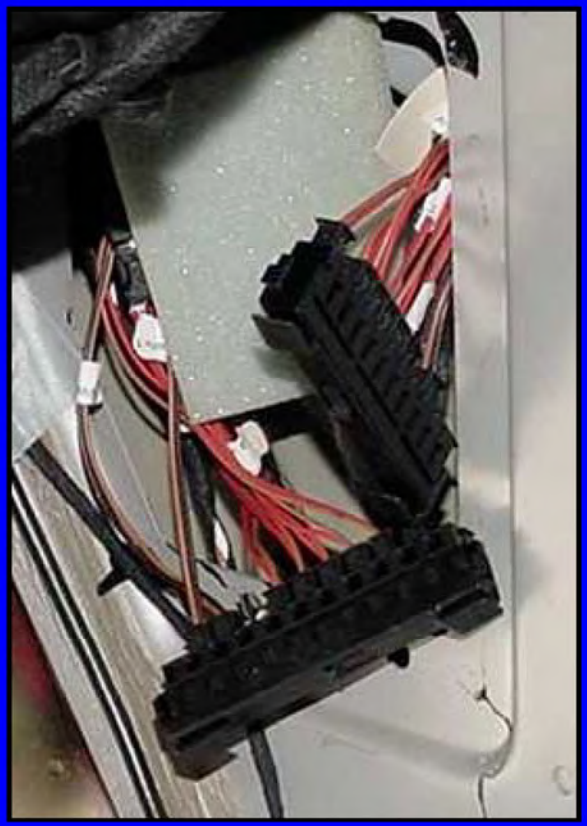

X30/4

OBF	- Upper control panel (N72/1)
Ver POT V3	- Jumper to X30/7
DBE	- Overhead control panel (N70)
TSG H re	- RR Door control module (N69/4)
Sitz	- LF Electric seat adjuster (N32/2)
Ver POT V1	- Jumper to X30/6
KLA	- Air conditioning module (N22)
TSG V re	- RF Door control module (N69/2)

X30/7

Radio	- Radio (not used)
COMAND	- COMAND (A40/3)
SAM V	- Front SAM (N10/1)
Ver POT V3	- Jumper to X30/4
TSG HL	- LR Door control module (N69/3)
Sitz	- LF Electric seat adjuster (N32/1)
SAM H	- Rear SAM (N10/2)

CAN C Connector (X63/4)

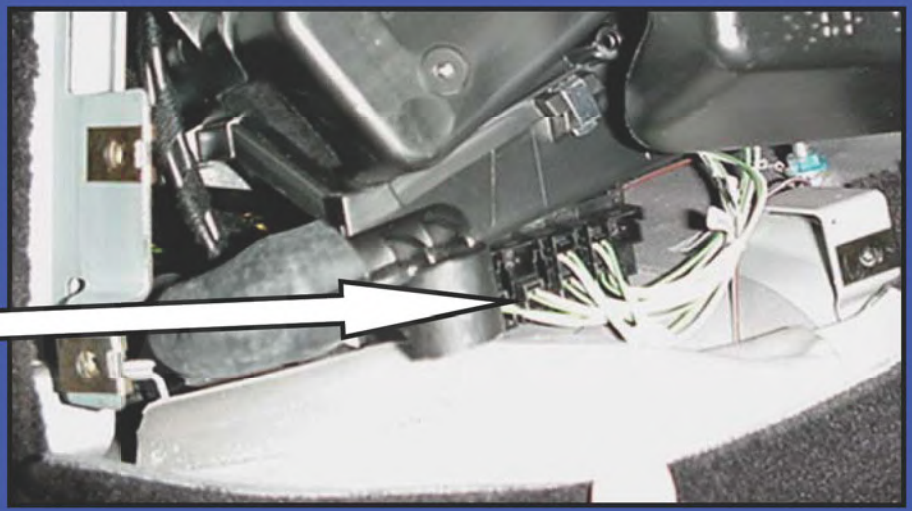

Location: right side of center console

Label Legend:

EZS - Electronic ignition switch (N73)
Kombi - Instrument cluster (A1)
ME - ME-SFI control module (N3/10)
VGS - Transfer case control module (N15/7)

EWM - Electronic shifter module (N15/5)
- ESP control module (N47/5)
NAG - ETC module (N15/3)
- Steering column module (N80)

Telephone & GPS Antenna

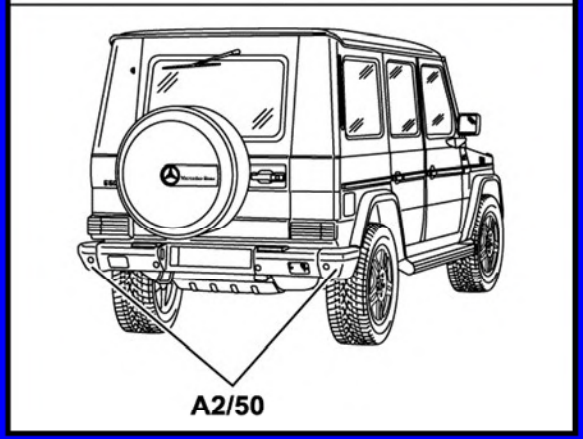

A2/22 ➔ Front roof edge

- Portable telephone
- TELE AID back up

A2/23 ➔ Behind left headlight surround

- GPS antenna for NAV & TELE AID

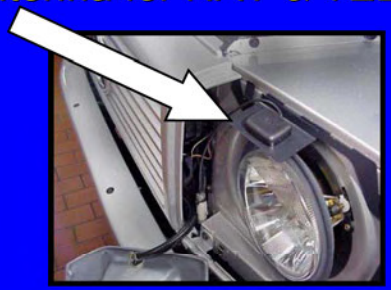

A2/50 ➔ Rear bumper end caps

- TELE AID primary

AM/FM Antenna

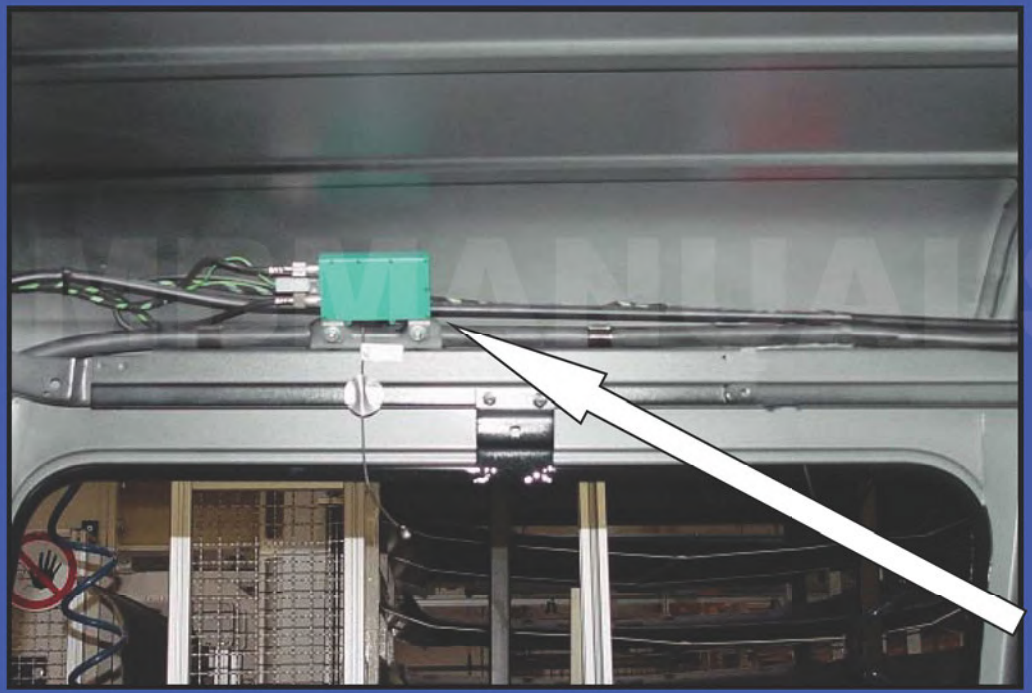

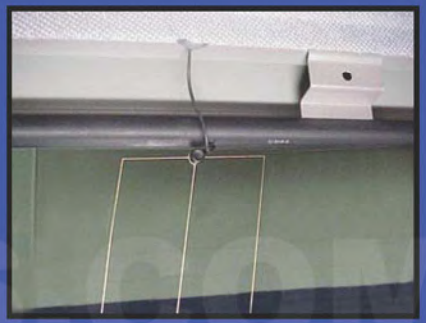

A2/18 ➔ Left rear window

- Antenna in window
- Amplifier

Central Locking Antenna & Amplifier

Antenna in windshield

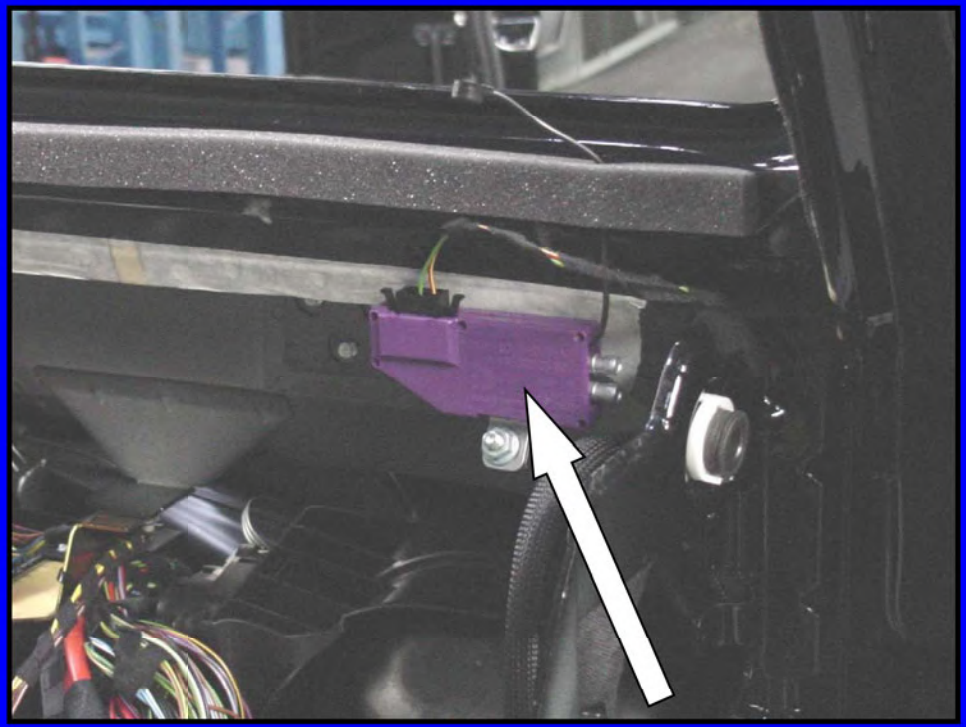

Amplifier at base of windshield on right side

Electric Central Locking

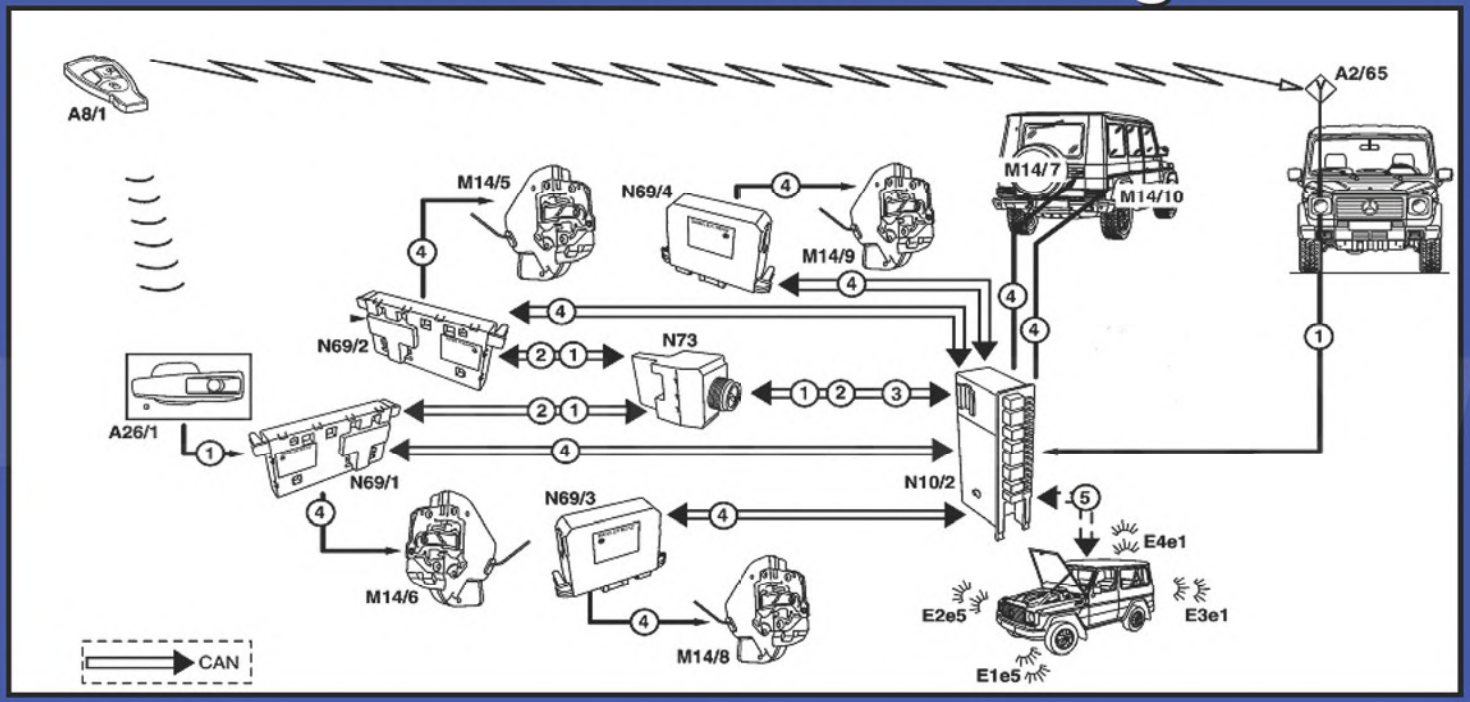

- RF antenna in front windshield
- IR receiver in LF door only
- Door closure monitored by micro switches in door latch assemblies
- Door central locking motor incorporated in latch assemblies

Anti Theft Alarm (ATA)

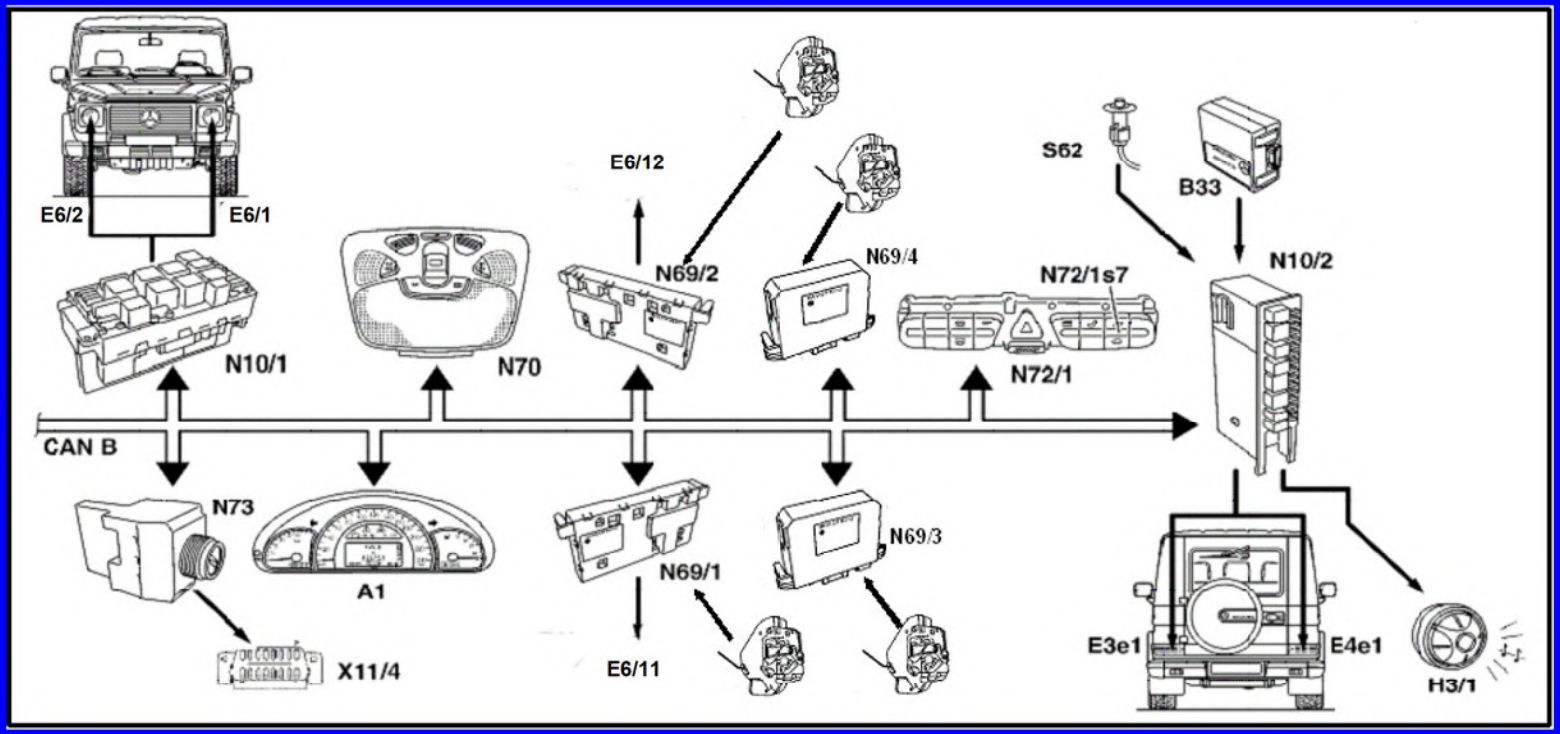

- Rear SAM is the primary ATA module
- Hood contact switch (not micro switch)
- Door latch micro switch in latch assembly
- Alarm siren hard wired to rear SAM

CL & ATA Legend

A1 - Instrument cluster
A2/65 - CL antenna
A8/1 - SmartKey
A26/1 - IR receiver
B33 - ATA tilt sensor
E3e1 - LR Turn signal lamp
E4e1 - RR Turn signal lamp
E6/1 - LF Turn signal lamp (front fender)
E6/2 - RF Turn signal lamp (front fender)
E6/11 - Left turn signal lamp (A pillar)
E6/12 - Right turn signal lamp (A pillar)
H3/1 - ATA siren
M14/5 - RF door latch motor / micro switch
M14/6 - LF door latch motor / micro switch
M14/7 - Tailgate latch motor / micro switch
M14/8 - LR door latch motor / micro switch
M14/9 - RR door latch motor / micro switch
M14/10 - Fuel filler flap lock motor
N10/1 - Front SAM
N10/2 - Rear SAM
N69/1 - LF Door control module
N69/2 - RF Door control module
N69/3 - LR Door control module
N69/4 - RR Door control module
N70 - Overhead control panel
N72/1 - Upper control panel
N72/1s7 - Tow sensor off switch
N73 - Electronic ignition switch
S62 - Hood contact switch
X11/4 - Diagnostic connector

MBMANUALS.COM

ATA Siren

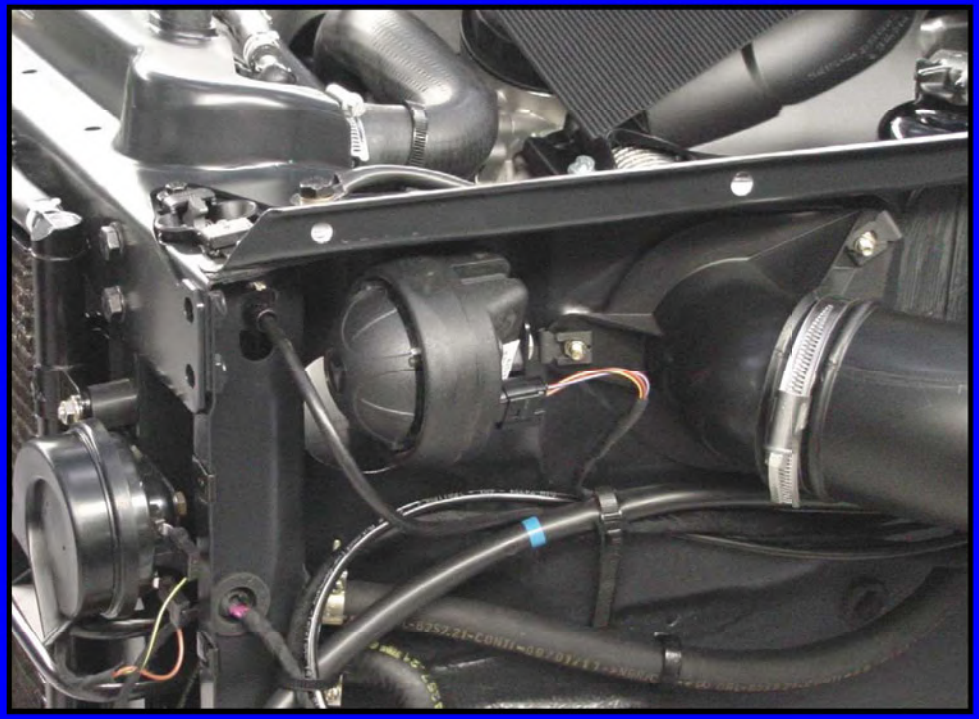

Location: in left front fender

- Hard wired to rear SAM
  - 12 V fused power supply (N10/2 f8) for operation and charging battery
  - Bi-directional communication with rear SAM (arm/disarm)
- Built in battery back up
  - If ATA armed and battery disconnected siren will still work

Outside Lighting

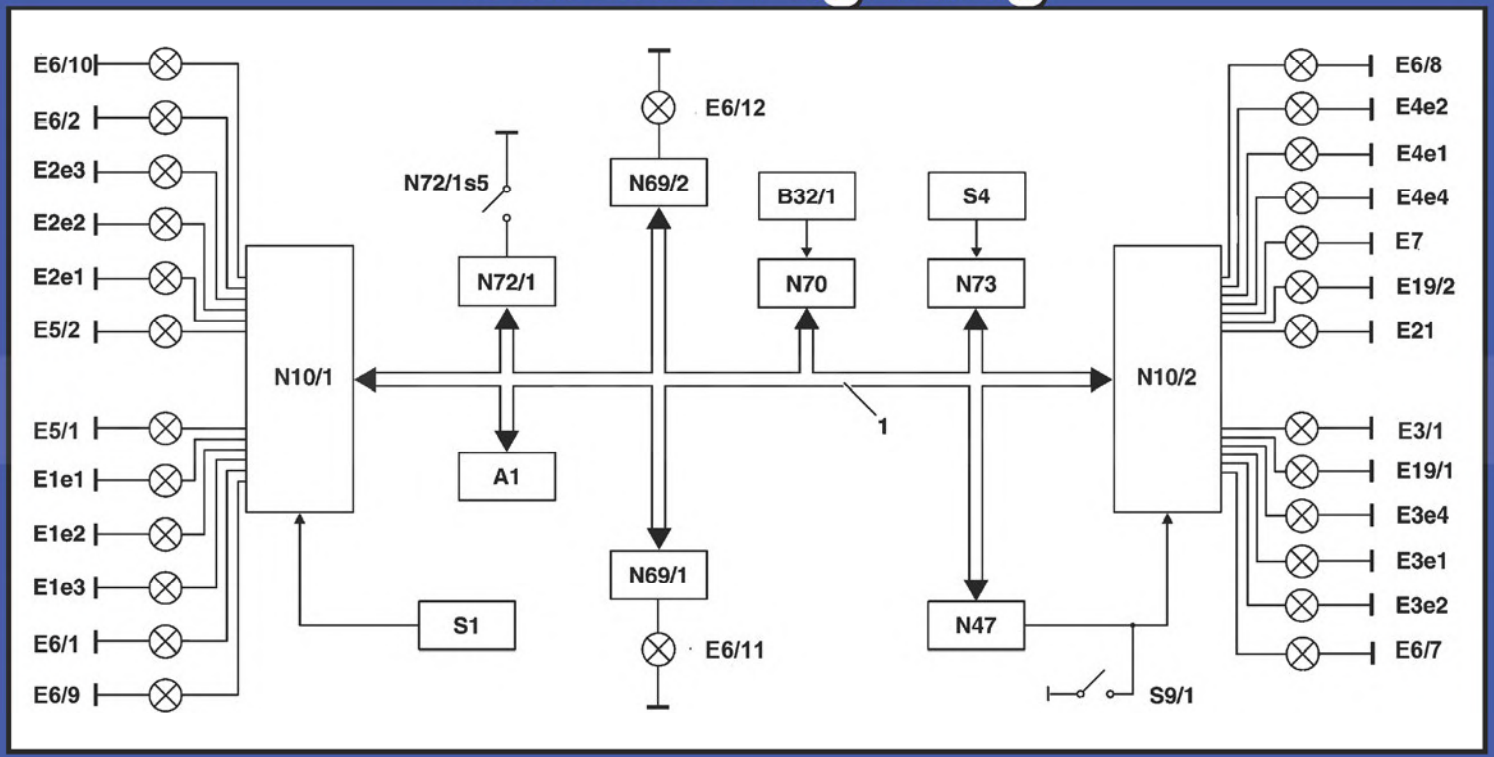

- Circuit protection by electronic fuses in SAM's
- 1 reverse lamp lens (right side)
- 1 rear fog lamp lens (left side)
- Lamp substitution only for tail lamps (activate stop lamps with PWM)

Legend

A1	- Instrument cluster
B32/1	- Light sensor
E1e1	- LF High beam
E1e2	- LF Low beam
E1e3	- LF Standing / Parking lamp
E2e1	- RF High beam
E2e2	- RF Low beam
E2e3	- RF Standing / Parking lamp
E3e1	- LR Turn signal lamp
E3e2	- LR Standing / Parking lamp
E3e4	- LR Stop lamp
E3/1	- Rear Fog lamp
E4e1	- RR Turn signal lamp
E4e2	- RR Standing / Parking lamp
E4e4	- RR Stop lamp
E5/1	- LF Fog lamp
E5/2	- RF Fog lamp
E6/1	- LF Turn signal lamp (top of fender)
E6/2	- RF Turn signal lamp (top of fender)
E6/7	- LR side marker lamp
E6/8	- RR side marker lamp
E6/9	- LF side marker lamp
E6/10	- RF side marker lamp
E6/11	- Left turn signal lamp (A pillar)
E6/12	- Right turn signal lamp (A pillar)
E7	- Reverse lamp
E19/1	- Left license plate lamp
E19/2	- Right license plate lamp
E21	- Third stop lamp
N10/1	- Front SAM
N10/2	- Rear SAM
N47/5	- ESP control module
N69/1	- LF Door control module
N69/2	- RF Door control module
N70	- Overhead control panel
N72/1	- Upper control panel
N72/1s5	- Hazard warning switch
N73	- Electronic ignition switch
S1	- Light switch
S4	- Combination switch
S9/1	- Stop lamp switch
1	- CAN B

Convenience Electronics

- Easy entry / exit feature for steering wheel only
- “Tip” / touch flash directional signals
- Automatic exterior lighting
- Night security illumination
  - Locator lighting
  - Headlamp delay
- Climate control is the same as found on C240 (AAC)
- Front and rear seat heaters are standard
- Key dependant memory feature can be activated

MBMANUALS.COM

Reversing Aid (BA)

Distance warning system when reversing at slow speeds.

Alerts the driver:
- visually
- audible

Location: right rear D pillar

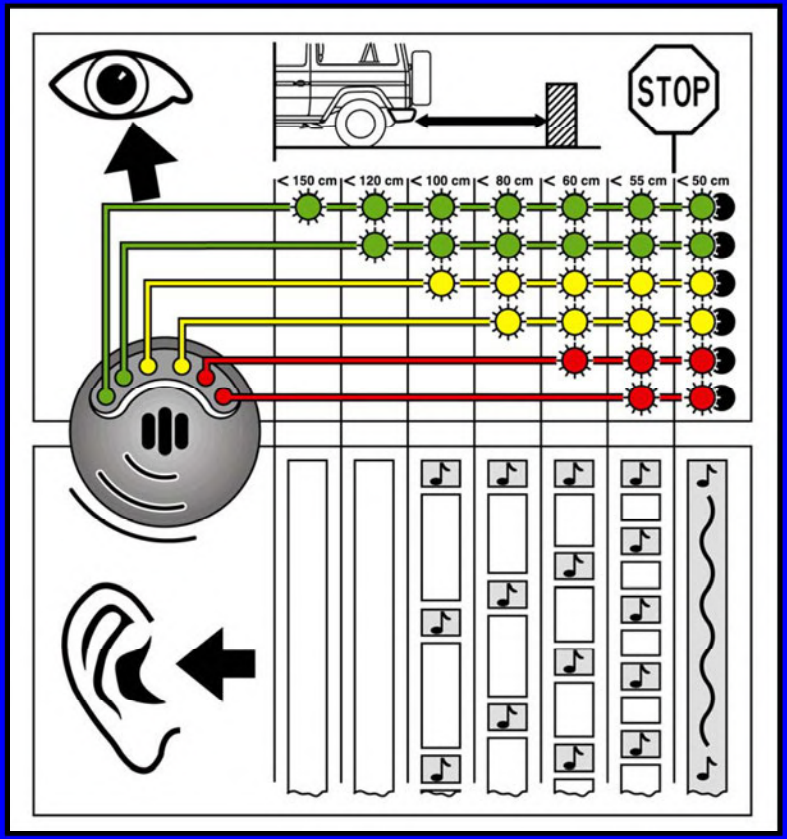

BA Control Module & Sensors

Reversing aid control module (N62)
located in left rear cargo area (near CD changer)

- Evaluates signals from rear bumper sensors
- Operates warning indicator display (A44)
- No self diagnostics
- SDS / DAS has guided tests

MBMANUALS.COM

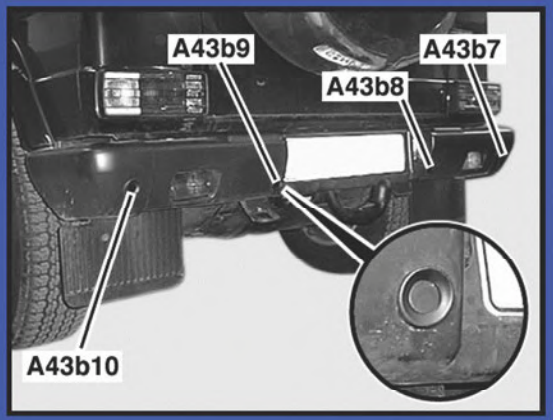

Rear Bumper sensors (A43/_)

- 4 Ultrasonic bumper sensors
- Optimal sensor range
  - ➔ 11 - 70 inches

Drivers Multicontour Seat (MCS)

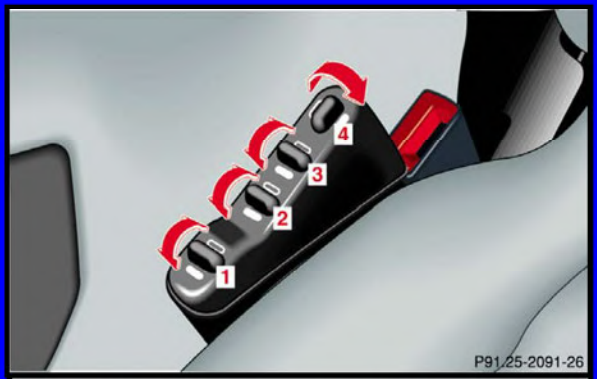

1 - Seat base 2 - Lower back
3 - Upper back 4 - Back side

- Adjust air volume in various bladders within drivers seat using control valve
- MCS pump (M14/11) supplies air volume to control valve as required
- M14/11 located under cover plate (2), right side of the battery (G1)

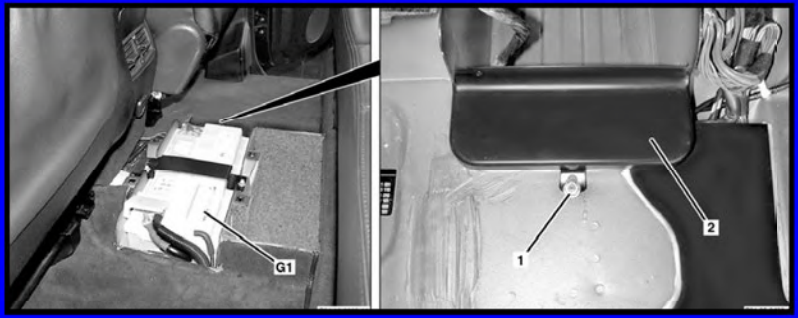

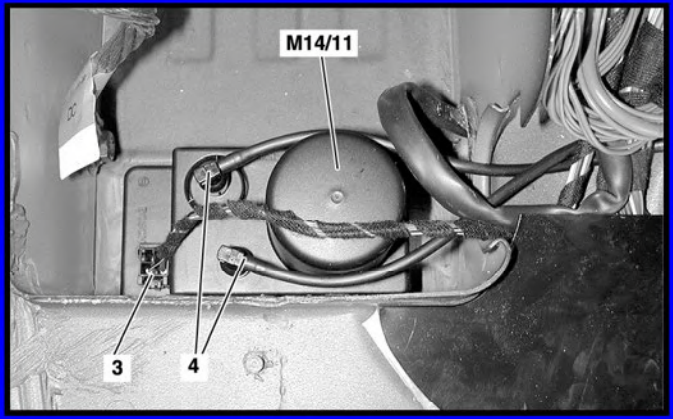

Service Tip

Cover above front SAM & ME-SFI control modules must be watertight or electrical problems will occur

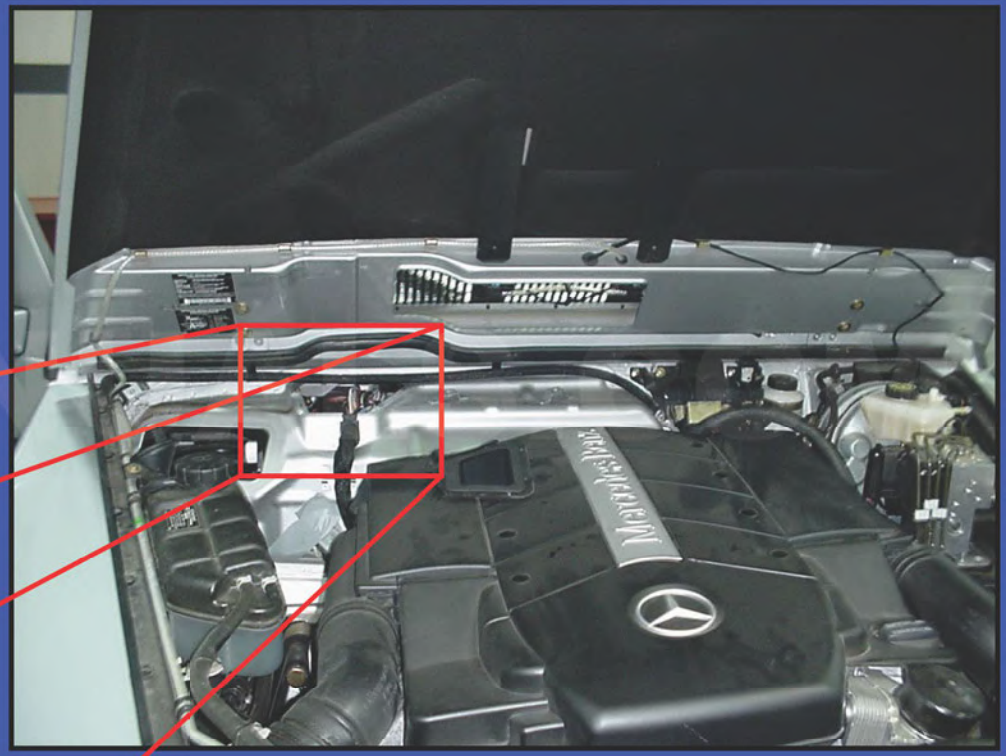

Location: under AAC air intake